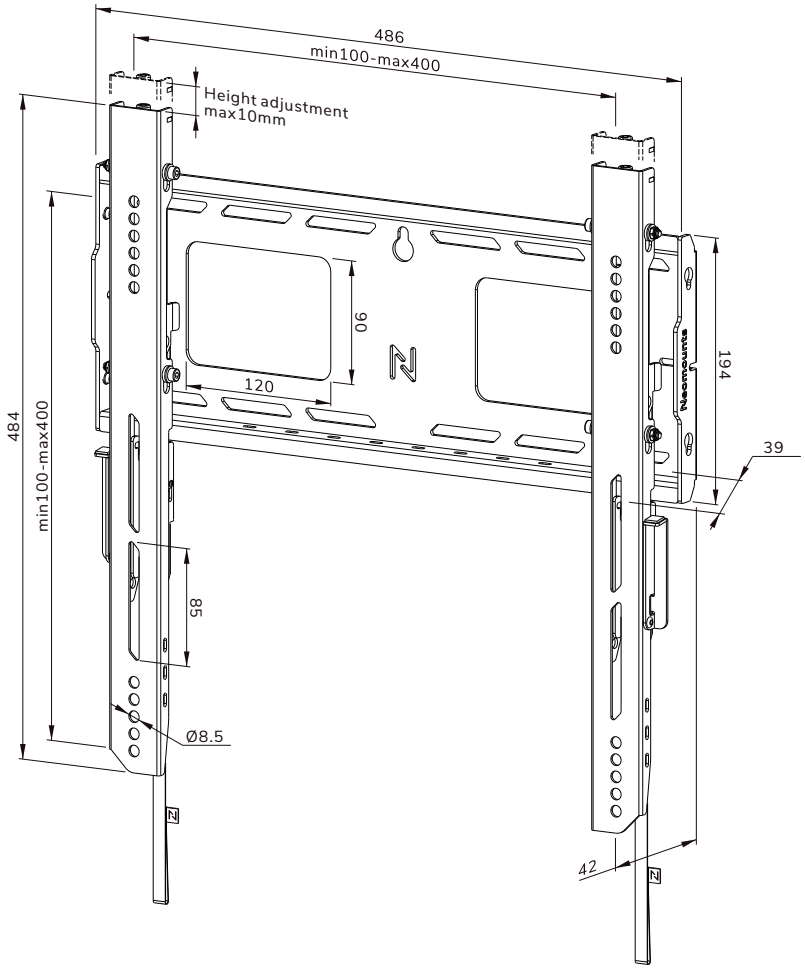
486
min100-max400
Height adjustment
max10mm
90
120
194
39
484
min100-max400
85
Ø8.5
42

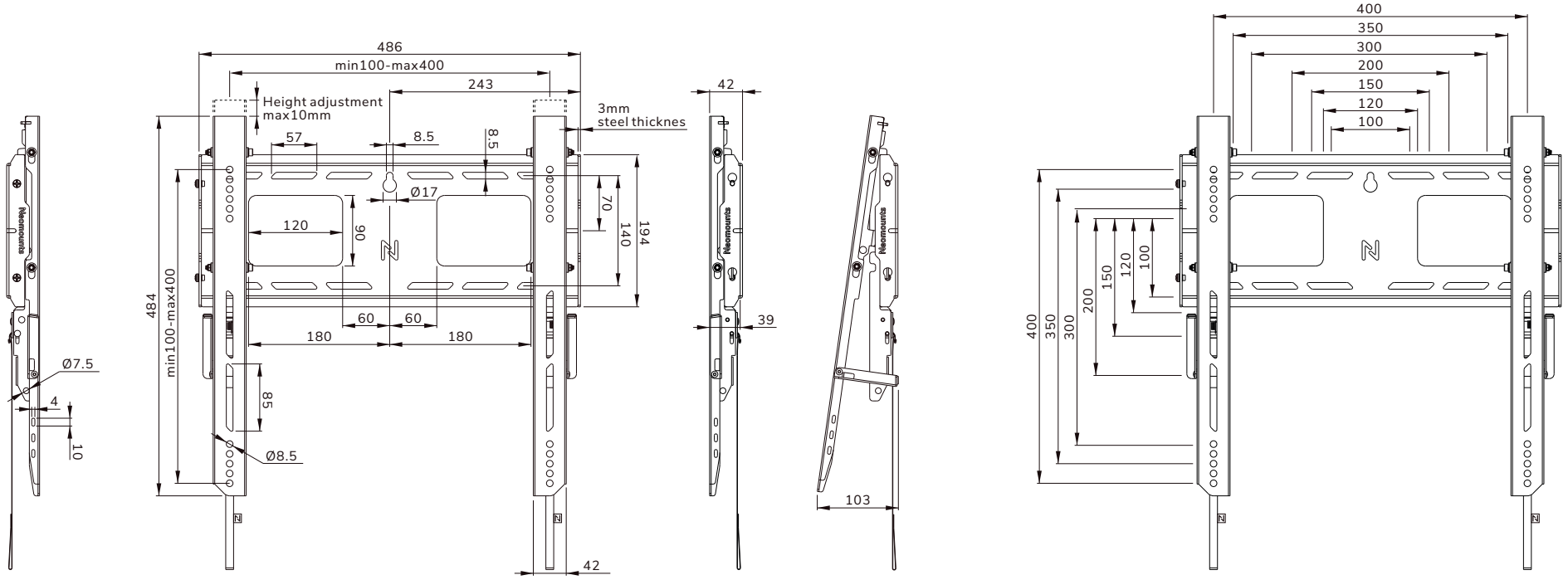

Measuring unit: mm