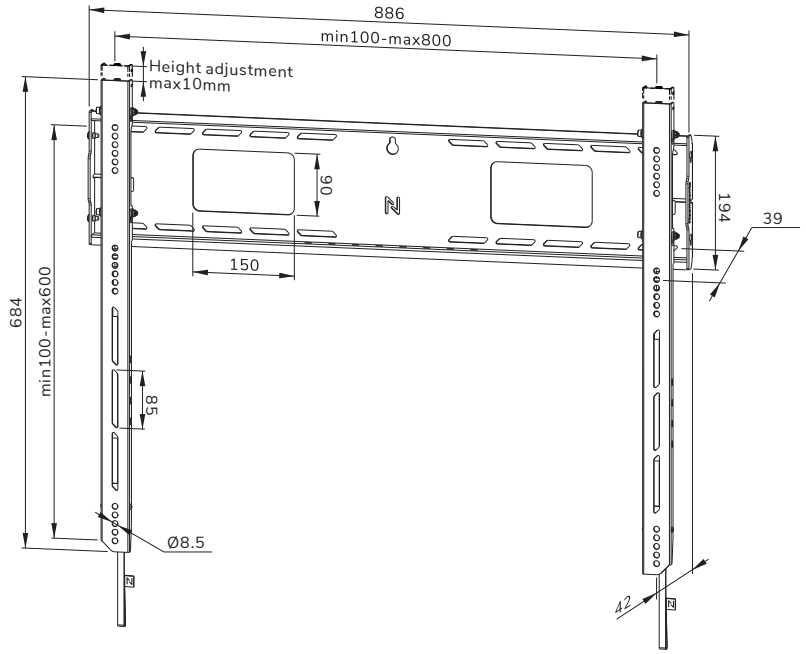
886
min100-max800
Height adjustment
max10mm
90
194
39
150
684
min100-max600
85
Ø8.5
42

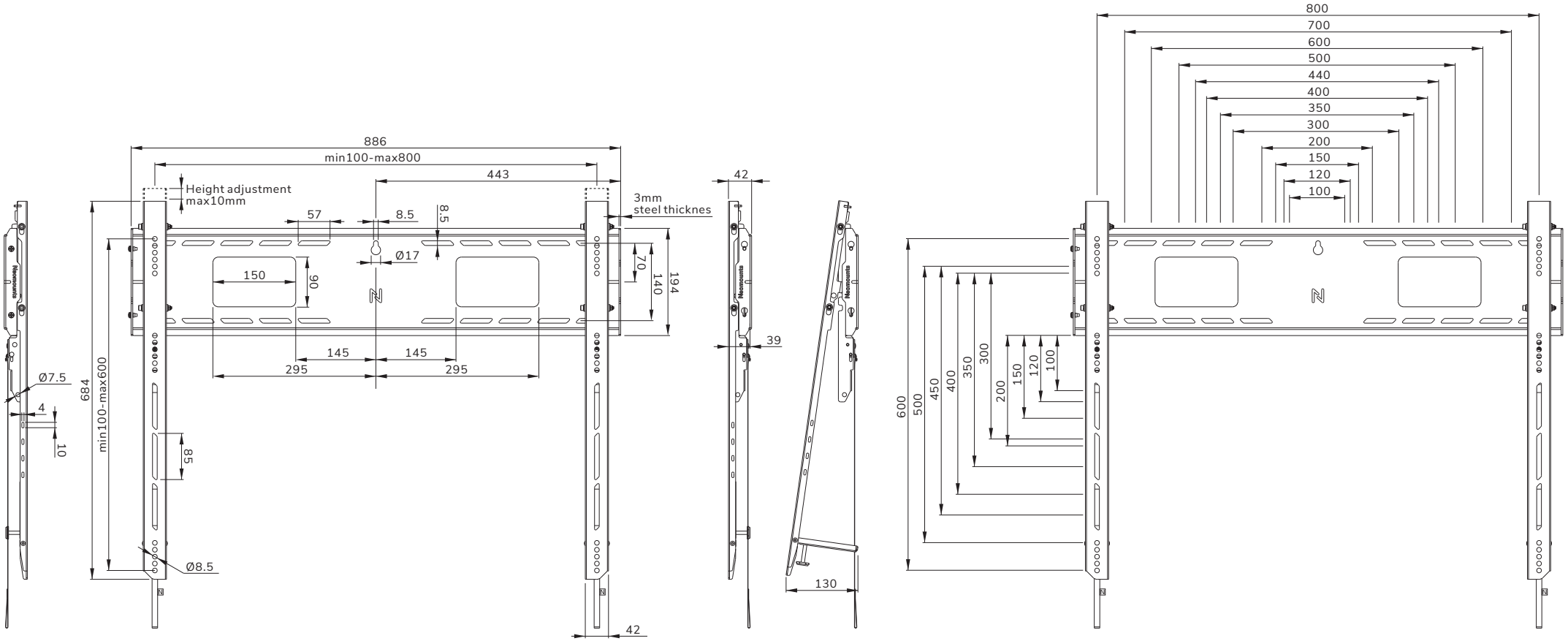

Measuring unit: mm